Metal Ball Valves—Flanged, Threaded, and Welding Ends

API STANDARD 608
FIFTH EDITION, NOVEMBER 2012

VALVE DESIGN QQ GROUP:404444436/41469233
BY:WILIA



AMERICAN PETROLEUM INSTITUTE

Copyright American Petroleum Institute
Provided by IHS under license with API
No reproduction or networking permitted without license from IHS

VALVE DESIGN QQ GROUP:40444436/41469233
BY:WILIA

--`,,``,,`,,,,`,,`,,,`,,`,,,,`,`,,`,`,,`,`,,`,`,,`,`---

Copyright American Petroleum Institute
Provided by IHS under license with API
No reproduction or networking permitted without license from IHS

Metal Ball Valves—Flanged, Threaded, and Welding Ends

Downstream Segment

API STANDARD 608
FIFTH EDITION, NOVEMBER 2012

VALVE DESIGN QQ GROUP:40444436/41469233
BY:WILIA



AMERICAN PETROLEUM INSTITUTE

Copyright American Petroleum Institute
Provided by IHS under license with API
No reproduction or networking permitted without license from IHS

Special Notes

API publications necessarily address problems of a general nature. With respect to particular circumstances, local, state, and federal laws and regulations should be reviewed.

Neither API nor any of API's employees, subcontractors, consultants, committees, or other assignees make any warranty or representation, either express or implied, with respect to the accuracy, completeness, or usefulness of the information contained herein, or assume any liability or responsibility for any use, or the results of such use, of any information or process disclosed in this publication. Neither API nor any of API's employees, subcontractors, consultants, or other assignees represent that use of this publication would not infringe upon privately owned rights.

API publications may be used by anyone desiring to do so. Every effort has been made by the Institute to assure the accuracy and reliability of the data contained in them; however, the Institute makes no representation, warranty, or guarantee in connection with this publication and hereby expressly disclaims any liability or responsibility for loss or damage resulting from its use or for the violation of any authorities having jurisdiction with which this publication may conflict.

API publications are published to facilitate the broad availability of proven, sound engineering and operating practices. These publications are not intended to obviate the need for applying sound engineering judgment regarding when and where these publications should be utilized. The formulation and publication of API publications is not intended in any way to inhibit anyone from using any other practices.

Any manufacturer marking equipment or materials in conformance with the marking requirements of an API standard is solely responsible for complying with all the applicable requirements of that standard. API does not represent, warrant, or guarantee that such products do in fact conform to the applicable API standard.

Users of this Standard should not rely exclusively on the information contained in this document. Sound business, scientific, engineering, and safety judgment should be used in employing the information contained herein.

VALVE DESIGN QQ GROUP 404444436/41469233 BY WILIA

All rights reserved. No part of this work may be reproduced, translated, stored in a retrieval system, or transmitted by any means, electronic, mechanical, photocopying, recording, or otherwise, without prior written permission from the publisher. Contact the Publisher, API Publishing Services, 1220 L Street, NW, Washington, DC 20005.

Copyright © 2012 American Petroleum Institute

Copyright American Petroleum Institute
Provided by IHS under license with API
No reproduction or networking permitted without license from IHS

Foreword

Nothing contained in any API publication is to be construed as granting any right, by implication or otherwise, for the manufacture, sale, or use of any method, apparatus, or product covered by letters patent. Neither should anything contained in the publication be construed as insuring anyone against liability for infringement of letters patent.

Shall: As used in a standard, “shall” denotes a minimum requirement in order to conform to the specification.

Should: As used in a standard, “should” denotes a recommendation or that which is advised but not required in order to conform to the specification.

This document was produced under API standardization procedures that ensure appropriate notification and participation in the developmental process and is designated as an API standard. Questions concerning the interpretation of the content of this publication or comments and questions concerning the procedures under which this publication was developed should be directed in writing to the Director of Standards, American Petroleum Institute, 1220 L Street, NW, Washington, DC 20005. Requests for permission to reproduce or translate all or any part of the material published herein should also be addressed to the director.

Generally, API standards are reviewed and revised, reaffirmed, or withdrawn at least every five years. A one-time extension of up to two years may be added to this review cycle. Status of the publication can be ascertained from the API Standards Department, telephone (202) 682-8000. A catalog of API publications and materials is published annually by API, 1220 L Street, NW, Washington, DC 20005.

Suggested revisions are invited and should be submitted to the Standards Department, API, 1220 L Street, NW, Washington, DC 20005, standards@api.org.

VALVE DESIGN QQ GROUP:404444436/41409233
BY:WILIA

Copyright American Petroleum Institute
Provided by IHS under license with API
No reproduction or networking permitted without license from IHS

VALVE DESIGN QQ GROUP:40444436/41469233
BY:WILIA

Copyright American Petroleum Institute
Provided by IHS under license with API
No reproduction or networking permitted without license from IHS

Contents

Page

1 Scope . . . 1
2 Normative References . . . 1
3 Terms and Definitions . . . 2
4 Pressure-Temperature Ratings . . . 3
4.1 Valve Rating . . . 3
4.2 Shell Rating . . . 3
4.3 Seat and Seal Rating . . . 3
5 Design . . . 4
5.1 General . . . 4
5.2 Flow Passageway . . . 4
5.3 Body . . . 5
5.4 Antistatic Design (Electrical Continuity Between Ball-Stem-Body) . . . 6
5.5 Ball-Stem Design and Construction . . . 6
5.6 Ball Construction . . . 6
5.7 Packing Glands and Gland Bolting . . . 6
5.8 Operation . . . 7
5.9 End Flange Face Interruptions . . . 7
5.10 Valve Shell Joints . . . 8
6 Materials . . . 8
6.1 Shell . . . 8
6.2 Trim . . . 9
6.3 Bolting . . . 9
6.4 Stem Seals, Body Seals, and Gaskets . . . 9
6.5 Identification Plate(s) . . . 9
6.6 Threaded Plugs . . . 9
7 Inspection, Examination, and Testing . . . 9
7.1 Inspection and Examination . . . 9
7.2 Assembly . . . 9
7.3 Pressure Testing . . . 9
7.4 Fire Testing . . . 10
8 Marking . . . 10
9 Packaging and Shipping Requirements . . . 10
10 Spare Parts . . . 12
Annex A (informative) Information to Be Specified by the Purchaser . . . 13
Annex B (informative) Figures . . . 14

Figures

1 Flange Face Interruption Limits . . . 8
2 Typical Fire-resistant Seats . . . 11
3 Typical Unidirectional Valve Identification Plate Symbol . . . 12
B.1 Typical Floating Ball Valve Components (One-piece Body/Unibody Illustrated)—Nomenclature . . . 14
B.2 Typical Trunnion-mounted Ball Valve Components (Split-body Valve Illustrated)—Nomenclature . . . 15

Copyright American Petroleum Institute
Provided by IHS under license with API
No reproduction or networking permitted without license from IHS

VALVE DESIGN QQ GROUP:404443836/414469233 BY:WILIA

Contents

Page

Tables

1 Minimum Seat Pressure-Temperature Rating—bar 3
2 Minimum Seat Pressure-Temperature Rating—psig 4
3 Cylinder Diameter for Categorizing Bore Size 4

VALVE DESIGN QQ GROUP:404444436/41469233
BY:WILIA

Copyright American Petroleum Institute
Provided by IHS under license with API
No reproduction or networking permitted without license from IHS

Introduction

The purpose of this API standard is to establish additional design, operational, and performance requirements required by petroleum refining, petrochemical processing, and chemical processing end users that are in addition to and beyond the requirements established by ASME B16.34, *Valves—Flanged, Threaded, and Welding End*.

API 608 is intended to provide the similar additional requirements for steel and alloy steel ball valves beyond ASME B16.34 as do the following API standards for other valve types:

— API Standard 594, *Check Valves: Flanged, Lug, Wafer and Butt-welding*;

— API Standard 599, *Metal Plug Valves—Flanged, Threaded, and Welding Ends*;

— API Standard 600, *Steel Gate Valves: Flanged and Butt-Welding Ends, Bolted Bonnets*;

— API Standard 602, *Steel Gate, Globe, and Check Valves for Sizes DN 100 and Smaller for the Petroleum and Natural Gas Industries*;

— API Standard 603, *Corrosion-resistant, Bolted Bonnet Gate Valves—Flanged and Butt-welding Ends*;

— API Standard 609, *Butterfly Valves: Double-flanged, Lug- and Wafer-type*.

VALVE DESIGN QQ GROUP:40444436/41469233
BY:WILIA

--`,,```,,,,````,,,,```,,,,`-`-`,,`,,`,`,,`---
Copyright American Petroleum Institute
Provided by IHS under license with API
No reproduction or networking permitted without license from IHS

VALVE DESIGN QQ GROUP:40444436/41469233
BY:WILIA

--`,,```,,,,````-`-`,,`,,`,`,,`---

Copyright American Petroleum Institute
Provided by IHS under license with API
No reproduction or networking permitted without license from IHS

Metal Ball Valves—Flanged, Threaded, and Welding Ends

1 Scope

1.1 This standard specifies the requirements for metal ball valves suitable for petroleum, petrochemical, and industrial applications that have:

— flanged ends in sizes DN 15 through DN 600 (NPS 1/2 through NPS 24);

— butt-welding ends in sizes DN 15 through DN 600 (NPS 1/2 through NPS 24);

— socket-welding ends in sizes DN 8 through DN 50 (NPS 1/4 through NPS 2);

— threaded ends in sizes DN 8 through DN 50 (NPS 1/4 through NPS 2).

Corresponding to the nominal pipe sizes in ASME B36.10M.

1.2 This standard applies to metal ball valves with pressure classes as follows:

— flanged ends in Classes 150, 300, and 600;

— butt-welding ends in Classes 150, 300, and 600;

— socket-welding ends in Classes 150, 300, 600, and 800;

— threaded ends in Classes 150, 300, 600, and 800.

1.3 This standard establishes requirements for bore sizes described as:

— full bore;

— single reduced bore;

— double reduced bore.

1.4 This standard applies to floating (seat-supported) ball (Figure B.1) and trunnion ball valve designs (Figure B.2). These figures are to be used only for the purpose of establishing standard nomenclature for valve components—other floating and trunnion designs also exist.

1.5 This standard establishes additional requirements for ball valves that are otherwise in full conformance to the requirements of ASME B16.34, Standard Class.

2 Normative References

The following referenced documents are indispensable for the application of this document. For dated references, only the edition cited applies. For undated references, the latest edition of the referenced document (including any amendments) applies.

API Standard 598, *Valve Inspection and Testing*

API Standard 607, *Fire Test for Quarter-turn Valves and Valves Equipped with Non-metallic Seats*

ASME B1.1 [1], *Unified Inch Screw Threads (UN and UNR Thread Form)*

VALVE DESIGN QQ GROUP:404444456/41469233 BY:WILIA

Copyright American Petroleum Institute
Provided by IHS under license with API
No reproduction or networking permitted without license from IHS

ASME B1.20.1, *Pipe Threads, General Purpose (Inch)*

ASME B16.5, *Pipe Flanges and Flanged Fittings NPS 1/2 Through 24 Metric/Inch Standard*

ASME B16.10, *Face-to-Face and End-to-End Dimensions of Valves*

ASME B16.11, *Forged Fittings, Socket-welding and Threaded*

ASME B16.20, *Metallic Gaskets for Pipe Flanges—Ring-joint, Spiral-wound, and Jacketed*

ASME B16.25, *Buttwelding Ends*

ASME B16.34, *Valves—Flanged, Threaded, and Welding End*

ASME B18.2.2, *Square and Hex Nuts (Inch Series)*

ASME B36.10M, *Welded and Seamless Wrought Steel Pipe*

NACE MR 01032 [2], *Materials Resistant to Sulfide Stress Cracking in Corrosive Petroleum Refining Environments*

3 Terms and Definitions

For the purposes of this document, the following definitions apply.

3.1
Class
An alphanumeric designation that is used for reference purposes relating to valve pressure-temperature capability, taking into account valve material mechanical properties and valve dimensional characteristics. It comprises the letters Class followed by a dimensionless whole number. The number following the letters Class does not represent a measurable value and is not used for calculation purposes except where specified in this standard. The allowable pressure for a valve having a Class number depends on the valve material and its application temperature and is to be found in tables of pressure-temperature ratings.

3.2
DN
An alpha numeric designation of size that is common for components used in a piping system, used for reference purposes, comprising the letters DN followed by a dimensionless number indirectly related to the physical size of the bore or outside diameter of the end connection as appropriate. The dimensionless number following DN does not represent a measurable value and is not used for calculation purposes except where specified in this standard.

3.3
NPS
An alpha numeric designation of size that is common for components used in a piping system, used for reference purposes, comprising the letters NPS followed by a dimensionless number indirectly related to the physical size of the bore or outside diameter of the end connection as appropriate. The dimensionless number may be used as a valve size identifier without the prefix NPS. The dimensionless size identification number does not represent a measurable value and is not used for calculation purposes.

1 ASME International, 3 Park Avenue, New York, New York 10016-5990, www.asme.org.
2 NACE International (formerly the National Association of Corrosion Engineers), 1440 South Creek Drive, Houston, Texas 77218-8340, www.nace.org.

VALVE DESIGN GROUP:4044436/41469233 BY:WILIA

Copyright American Petroleum Institute
Provided by IHS under license with API
No reproduction or networking permitted without license from IHS

4 Pressure-Temperature Ratings

4.1 Valve Rating

The valve pressure-temperature rating shall be the lesser of the shell rating or the seat rating.

4.2 Shell Rating

The valve shell pressure-temperature rating shall be the rating for the shell material as listed for Standard Class in ASME B16.34 (see 6.1 for definition of shell and description of shell materials).

4.3 Seat and Seal Rating

4.3.1 Seat Ratings for PTFE and R-PTFE

Valves employing polytetrafluoroethylene (PTFE) or modified PTFE seats and valves employing reinforced polytetrafluoroethylene (R-PTFE) or modified R-PTFE seats shall have pressure-temperature ratings equal or higher than the values shown in Table 1 and Table 2.

4.3.2 Seat Ratings—Other Materials

Seat pressure-temperature ratings for seat materials other than PTFE or R-PTFE shall be the manufacturer's standard. Seats made from hard materials such as solid cobalt chrome alloy, ceramics, or metal seats coated with hard materials such as carbide coatings are also acceptable and shall have seat pressure-temperature ratings per the manufacturer's standard. The published seat pressure-temperature ratings shall not exceed the manufacturer's published shell ratings.

Table 1—Minimum Seat Pressure-Temperature Rating—bar

Temperature °C	Temperature °F	PTFE [a] and Modified PTFE Seats			Trunnion	R-PTFE [a] and Modified R-PTFE Seats			Trunnion
		Floating Ball Design				Floating Ball Design			
		DN ≤ 50	50 < DN ≤ 100	DN > 100	DN ≥ 50	DN ≤ 50	50 < DN ≤ 100	DN > 100	DN ≥ 50
–29 to 38	–20 to 100 [b]	69.0	51.0	19.7	51.0	75.9	51.0	19.7	51.0
66	150	56.9	42.1	16.2	42.1	63.8	43.1	16.6	43.1
93	200	45.5	33.4	13.1	33.4	52.4	35.5	13.8	35.5
122	250	34.5	24.5	9.7	24.5	39.7	27.6	10.7	27.6
149	300	22.4	15.9	6.2	15.9	29.0	19.0	7.6	19.0
177	350	11.7	6.9	2.8	6.9	17.2	8.6	3.5	8.6
205	400	—	—	—	—	5.5	3.4	1.4	3.4

NOTE For any given pressure class, the seat pressure-temperature rating shall not exceed the shell ratings in ASME B16.34.

[a] Polytetrafluoroethylene.

[b] Consult manufacturer for minimum design temperature rating of seats.

VALVE DESIGN GROUP 4044436/41469233 BY:WANG

Copyright American Petroleum Institute
Provided by IHS under license with API
No reproduction or networking permitted without license from IHS

Table 2—Minimum Seat Pressure-Temperature Rating—psig

Temperature °C	Temperature °F	PTFE [a] and Modified PTFE Seats			Trunnion	R-PTFE [a] and Modified R-PTFE Seats			Trunnion
		Floating Ball Design				Floating Ball Design			
		NPS ≤ 2	2 < NPS ≤ 4	NPS > 4	NPS ≥ 2	NPS ≤ 2	2 < NPS ≤ 4	NPS > 4	NPS ≥ 2
–29 to 38	–20 to 100 [b]	1000	740	285	740	1100	740	285	740
66	150	825	610	235	610	925	625	240	625
93	200	660	485	190	485	760	515	200	515
122	250	500	355	140	355	575	400	155	400
149	300	325	230	90	230	420	275	110	275
177	350	170	100	40	100	250	125	50	125
205	400	—	—	—	—	80	50	20	50

NOTE For any given pressure class, the seat pressure-temperature rating shall not exceed the shell ratings in ASME B16.34.

[a] Polytetrafluoroethylene.

[b] Consult manufacturer for minimum design temperature rating of seats.

5 Design

5.1 General

Valves designed and manufactured in accordance with this standard shall meet the requirements of Standard Class valves per ASME B16.34 and additional requirements as specified in this standard.

5.2 Flow Passageway

The flow passageway is the circular opening in the ball and extends outward to both valve end connections, which can be flanged, threaded, socket-welding, or butt-welding types. The bore of this flow passageway is categorized in this standard as full bore, single reduced bore, and double reduced bore. Full bore, single reduced bore, and double reduced bore valves shall have a flow passageway such that a cylinder with the diameters shown in Table 3 can be passed through when the handle or gear operator is moved to the full open position stop.

Table 3—Cylinder Diameter for Categorizing Bore Size

DN	Full Bore		Single Reduced Bore		Double Reduced Bore		NPS
	mm	in.	mm	in.	mm	in.	
8	5	0.20	n/a	n/a	n/a	n/a	1/4
10	8	0.32	5	0.20	n/a	n/a	3/8
15	11	0.44	8	0.31	n/a	n/a	1/2
20	17	0.68	12	0.47	8	0.31	3/4
25	24	0.94	17	0.68	14	0.56	1
32	30	1.19	22	0.87	18	0.71	1 1/4
40	37	1.44	27	1.06	23	0.91	1 1/2
50	49	1.94	37	1.44	30	1.19	2
65	62	2.44	49	1.94	37	1.44	2 1/2

VALVE DESIGN QQ GROUP:40444436/41469233 BY:WILIA

Copyright American Petroleum Institute
Provided by IHS under license with API
No reproduction or networking permitted without license from IHS

Table 3—Cylinder Diameter for Categorizing Bore Size (Continued)

DN	Full Bore		Single Reduced Bore		Double Reduced Bore		NPS
	mm	in.	mm	in.	mm	in.	
80	75	2.94	56	2.19	49	1.94	3
100	100	3.94	75	2.94	62	2.44	4
150	151	5.94	100	3.94	75	2.94	6
200	202	7.94	151	5.94	100	3.94	8
250	251	9.88	202 [a]	7.94 [a]	151	5.94	10
300	302	11.88	251 [b]	9.88 [b]	202	7.94	12
350	334	13.14	302	11.88	251	9.88	14
400	385	15.15	334	13.14	302	11.88	16
450	436	17.16	385	15.15	334	13.14	18
500	487	19.17	436	17.16	385	15.15	20
600	586	23.07	487	19.17	436	17.16	24

[a] For one-piece (unibody) design the minimum flow passage is 186 mm (7.32 in.).

[b] For one-piece (unibody) design the minimum flow passage is 227 mm (8.94 in.).

5.3 Body

5.3.1 The wall thicknesses of the valve body (see note) shall be in accordance with the requirements of ASME B16.34 for the applicable Standard Class. ASME wall thicknesses are based on the Standard Class of valve and not the pressure-temperature ratings of 4.1.

NOTE Body may be comprised of multiple components, such as body, body cap, etc.

5.3.2 Face-to-face dimensions of flanged valves and end-to-end dimensions of butt-welding end valves shall conform to ASME B16.10 ball valves—long or short pattern.

5.3.3 End-to-end dimensions for threaded and socket-welding end valves shall be per the manufacturer's standard.

5.3.4 The dimensions and facing finish of end flanges shall conform to ASME B16.5.

5.3.5 Butt-welding ends shall conform to the requirements of ASME B16.25 with an inside diameter (denoted as B in ASME B16.25) tolerance per ASME B16.34. DN 50 (NPS 2) and smaller butt-weld end valves shall conform to API 602.

5.3.6 Socket-welding ends shall conform to the requirements of ASME B16.11, except minimum wall thicknesses shall conform to Table 4 of ASME B16.34.

5.3.7 Threaded ends shall have taper pipe threads in accordance with ASME B1.20.1, and the minimum wall thicknesses shall conform to Table 4 of ASME B16.34.

5.3.8 End flanges and bonnet flanges shall be cast or forged integral with the body; except that cast or forged flanges attached by full penetration butt-welding may be used if agreed to by the purchaser. Valves having flanges attached by welding shall meet the requirements of Paragraph 2.1.6 of ASME B16.34.

VALVE DESIGN QQ GROUP:40444436/41469233 BY:WILIA

Copyright American Petroleum Institute
Provided by IHS under license with API
No reproduction or networking permitted without license from IHS

5.3.9 Upstream sealing, trunnion-mounted ball valves shall have a test port into the body cavity between seats to allow seat testing as specified in API 598. This test port shall have taper pipe threads in accordance with ASME B.1.20.1 and shall be fitted with a solid test plug conforming to ASME B16.11. Additional tapped openings are permitted only when specified in the purchase order and shall have taper pipe threads in accordance with ASME B.1.20.1.

5.3.10 If drain, bypass, or other types of auxiliary connections are specified in the purchase order, they shall comply with the requirements of ASME B16.34.

5.3.11 When specified in the purchase order, body cavity overpressure shall be in accordance with ASME B16.34.

5.4 Antistatic Design (Electrical Continuity Between Ball-Stem-Body)

Valves shall incorporate an antistatic feature that insures electrical continuity between the stem and body of valves ≤ DN 50 (≤ NPS 2) and between the ball, stem, and body of valves > DN 50 (> NPS 2). The antistatic feature shall have electrical continuity across the discharge path with a resistance not exceeding 10 ohms from a power source not exceeding 12 VDC when type tested on a new, dry, as-built valve after open-close position cycling of the valve at least five times.

5.5 Ball-Stem Design and Construction

5.5.1 The valve shall be designed to ensure that if a failure occurs at the stem-to-ball connection or of the stem itself within the pressure boundary, no portion of the stem is ejected by internal pressure.

5.5.2 The torsional strength of both the stem-to-ball connection and the portion of the stem within the pressure boundary (below top of packing) shall exceed the torsional strength of the stem portion above the pressure boundary (above the top of the packing) by at least 10 % at the maximum valve rated temperature.

5.5.3 The stem and the ball-to-stem connection shall be designed such that no permanent deformation occurs and no failure of any part occurs when a force applied to the lever or gear operator handwheel produces a torque equal to the greater of:

— 20 N-m (15 ft-lb) or

— twice the manufacturer's maximum published torque.

The manufacturer's maximum published torque shall be based upon clean, dry air service at the maximum differential pressure rating of the valve.

5.6 Ball Construction

Ball shall have a cylindrical bore and shall be of solid one-piece construction. Other constructions such as "hollow"-type, cored cavity, or sealed cavity may be furnished only if agreed to by the purchaser.

5.7 Packing Glands and Gland Bolting

5.7.1 Adjustable packing glands shall be accessible for resealing stem packing without the disassembly of valve parts or operator parts.

5.7.2 Packing glands that are threaded into bodies or covers or onto stems shall not be used for valve sizes greater than DN 80 (NPS 3) unless otherwise specified by purchaser. (See Figure B.1 and Figure B.2 for parts identification.)

5.7.3 Vertically split glands shall not be used.

VALVE DESIGN QQ GROUP:40444436/41469233 BY:WIIA

Copyright American Petroleum Institute
Provided by IHS under license with API
No reproduction or networking permitted without license from IHS

5.7.4 When used, gland bolts shall pass through holes in the packing gland. The use of open slots is not permitted on any portion of the packing gland.

5.7.5 Packing gland bolts shall be designed so that the bolt stress shall not exceed $^{1}/_{3}$ of the ultimate tensile strength of the bolting material when compressing packing material to a compressive stress of 38 MPa (5500 PSI) at 38 °C (100 °F).

5.8 Operation

5.8.1 Unless otherwise specified on the purchase order, manually operated valves shall be equipped with lever-type handles.

5.8.2 Gear operators shall be fitted with handwheels and shall be sized to comply with the requirements of 5.8.3.

5.8.3 Unless otherwise specified by the purchaser, the length of the lever handle or the gear ratio, efficiency, and handwheel diameter of gear operators shall be designed so that the required input force to fully open and close the valve shall not exceed 360 N (80 lb) when operating the valve at the manufacturer's maximum published torque as described in 5.5.3.

5.8.4 Valves shall be closed by rotating the closure device (lever or handwheel) in a clockwise direction.

5.8.5 Position stops shall be provided for both fully open and fully closed positions of the valve.

5.8.6 Handwheels on manual gear operators shall be marked to indicate the direction of opening and/or closing.

5.8.7 Lever-type handles shall be parallel to the ball bore so that the lever always indicates the ball bore position. If the purchaser specifies round or oval direct-mounted handwheels, a permanent means of indicating the ball bore position shall be included in the handwheel design.

5.8.8 An indication parallel with the position of ball bore of the valve shall be integral with the valve stem. This indication may be by permanent marking to the top of the stem, keyways, or by the shape of the exposed stem portion.

5.8.9 Levers, handwheels, and other operating mechanisms shall be fitted so that they may be removed and replaced without affecting the integrity of the stem seal(s), body seal(s), or stem retention means.

5.8.10 Lever or manual gear operators shall be designed so that the lever or gear operator cannot be assembled to the valve other than in the correct configuration to indicate open and closed positions.

5.8.11 When specified in the purchase order, valves shall be furnished with a lockable device that accepts a purchaser-supplied padlock that allows the valve to be locked in both the fully open and fully closed positions. The lockable device shall be designed such that a lock with a 8-mm ($^{5}/_{16}$-in.) diameter shank, not more than 102 mm (4.0 in.) long, can be inserted directly through hole(s) in lockable device and locked. Provision for lockable device is permitted, even when not specified on purchase order.

5.8.12 Position stops integral with packing gland, gland flange, or gland bolting shall not be used.

5.9 End Flange Face Interruptions

5.9.1 Ring-shaped radial gaps in the faces of end flanges of flanged ball valves, located in the sealing surface of a centered ASME B16.20 spiral-wound gasket, shall not exceed 0.75 mm (0.030 in.); see dimension in Figure 1. An example of this condition is the radial gap that exists between the outer diameter of a body insert and the inner bore of the body end flange of a valve as shown in Figure B.1.

VALVE DESIGN QQ GROUP:40444436/41469238 BY:WILIA

Copyright American Petroleum Institute
Provided by IHS under license with API
No reproduction or networking permitted without license from IHS

5.9.2 For ball valves designed with a body insert as shown in Figure B.1, with a gasket seating face outer diameter located within the sealing area of a centered ASME B16.20 spiral-wound gasket, the body insert flange face shall not protrude beyond the valve body end flange face. The body insert flange face shall not be recessed below the body end flange face by more than 0.25 mm (0.010 in.). See dimension a in Figure 1.

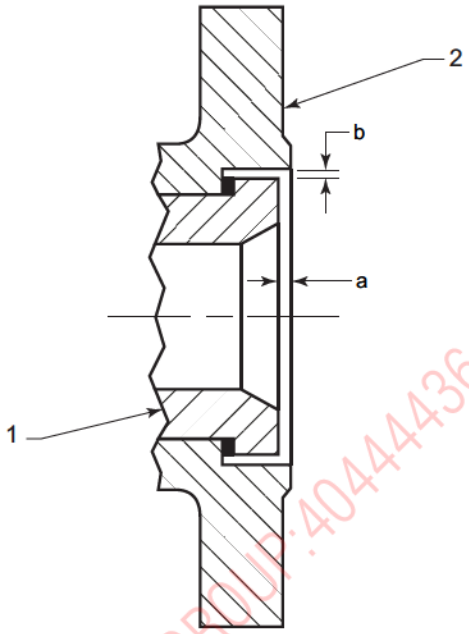

Key
1 body insert
2 valve body end flange

Figure 1—Flange Face Interruption Limits

VALVE DESIGN QQ GROUP:404444436/41469233 BY:WILIA

5.10 Valve Shell Joints

5.10.1 Nut and bolt head bearing surfaces of shell parts assembled by bolting shall be perpendicular to the centerline of tapped or clearance holes for the fasteners within ± 1.0°.

5.10.2 Bolting used for assembly of shell joints shall be studs with nuts or cap screws. Nuts shall be semifinished hexagons conforming to ASME B18.2.2. Bolts and studs shall be threaded in conformance to ASME B1.1 unless purchaser specifies metric series bolting. Bolting 25 mm (1 in.) or smaller shall have coarse (UNC) threads; bolting larger than 25 mm (1 in.) shall be 8 thread series (8 UN). Bolt and stud threads shall be Class 2A, and nut threads shall be Class 2B per ASME B1.1.

5.10.3 Each bolted or threaded shell joint calculation shall be in accordance with the requirements of ASME B16.34, Section 6.4.

6 Materials

6.1 Shell

The shell, which comprises the body, body cover, body insert, body cap, and trunnion cap, shall be of materials specified in ASME B16.34. See Figure B.1 and Figure B.2.

Copyright American Petroleum Institute
Provided by IHS under license with API
No reproduction or networking permitted without license from IHS

6.2 Trim

The internal metal parts of the valve, including ball, stem, metal seats, and seat retainers shall be of the same nominal chemical composition as the shell and have mechanical and corrosion-resistance properties equivalent to or better than those of the shell. Purchaser may specify trim materials with greater corrosion resistance or higher strength than the shell. See Figure B.1 and Figure B.2.

6.3 Bolting

Unless an alternate bolting material is specified by the purchaser, body, cover, shell joint, and packing gland bolting shall be intermediate strength as specified in ASME B16.5 as a minimum. Purchaser may specify higher grades of bolting materials.

6.4 Stem Seals, Body Seals, and Gaskets

Materials for stem seals, body seals and gaskets shall be suitable for use at the maximum operating temperature and corresponding maximum pressure rating of the valve as stated by the valve manufacturer. Metallic parts of any gasket shall have corrosion resisting properties equal to or superior to shell material.

6.5 Identification Plate(s)

The material of identification plate(s) shall be austenitic stainless steel or nickel alloy. The identification plate(s) shall be attached to the valve body by welding or by pins made from same materials allowed for identification plate.

6.6 Threaded Plugs

Threaded plugs used for sealing tapped openings shall have the same nominal composition as the shell material. Plugs manufactured from any type of cast iron shall not be used.

6.7 When specified in the purchase order, shell, trim, and bolting materials shall comply with NACE MR 0103.

7 Inspection, Examination, and Testing

7.1 Inspection and Examination

7.1.1 The valve manufacturer shall examine each valve to ensure compliance to this standard.

7.1.2 If inspection by the purchaser is specified in the purchase order, inspection shall be in accordance with API 598. Examination by the manufacturer shall be as specified in API 598.

7.2 Assembly

7.2.1 Light oil or antiseize compound may be applied to facilitate assembly of mating metal components.

7.2.2 Light oil, having a viscosity no greater than kerosene, may be used to assemble O-rings or other seals required to move during valve assembly.

7.2.3 No sealant or grease may be applied to the ball-seat interface prior to testing.

7.3 Pressure Testing

Each valve shall be pressure tested in accordance with API 598.

VALVE DESIGN QQ GROUP:40444436/41469233 BY:WIJA

Copyright American Petroleum Institute
Provided by IHS under license with API
No reproduction or networking permitted without license from IHS

7.4 Fire Testing

When a fire-tested ball valve is required, or when the purchaser specifies fire-tested valves, the valve design supplied shall have successfully passed API 607. See Figure 2 for two examples of a fire-resistant seat arrangement using a resilient primary non-fire-resistant seal and a secondary metal back-up seat.

8 Marking

8.1 Identification plate shall be marked in accordance with ASME B16.34 and shall also be marked "API 608."

8.2 Body end flanges require marking when end flanges are ring type joint design. The ring joint groove number (such as R24) shall be marked on each end flange outside diameter using low-stress marking. Ring joint groove numbers are as shown in ASME B16.5.

8.3 The following indicate special marking for unidirectional valves.

8.3.1 Valves designed for or modified to have sealing capability in only one direction or orientation shall be marked to identify the unidirectional seat. Markings shall be applied to the body of the valve at the appropriate end or on an identification plate (see 6.5).

8.3.2 Markings on the body shall consist of letters or symbols cast, stamped, or otherwise integral with the valve, or marked on an identification plate (see 6.5), or both. When stamping is used on valve body, low-stress stamping process shall be used.

8.3.3 Typical markings include arrows to indicate preferred sealing direction or "high-pressure side" marked at the appropriate end connection or on the identification plate (see Figure 3).

9 Packaging and Shipping Requirements

9.1 Prior to packaging or shipping, each valve shall be drained of test fluid, including draining of the body cavity area between seats and around ball and cavities of "cored balls" if used.

9.2 Valves manufactured with shell materials shown in ASME B16.34 Group 1 shall have lead-free rust preventative coatings on all unmachined exterior body surfaces.

9.3 Machined or threaded surfaces that are not protected from atmospheric corrosion shall be coated with an easily removable, lead-free rust inhibitor.

9.4 Protective end plugs of wood, wood fiber, plastic, or metal shall be securely inserted into the valve end connections of socket-welding and threaded valves or over the threaded ends in the case of external threaded ends. The protective end plugs or covers shall be of a design such that the valve cannot be installed with the protective plug or cover in place.

9.5 Protective covers of wood, wood fiber, plastic, or metal shall be securely attached to the valve ends of flanged and butt-welding end valves to protect the gasket surfaces and weld end preparations. The protective end covers shall be of a design such that the valve cannot be installed with the protective cover in place.

9.6 At the time of shipment, the ball shall be in the full open position, unless design precludes this position, such as in the case of a spring-return to closed position actuated ball valve.

9.7 Tapped auxiliary connections shall be fitted with fully tightened solid threaded plugs (see 5.3.9 and 6.6). The thread sealant used to seal the plugs shall be suitable for the full pressure and temperature rating of the valve or as per agreement between purchaser and valve manufacturer.

VALVE FSIOV QC GROUP:40A4436/A1469233 BY:WUJIA

Copyright American Petroleum Institute
Provided by IHS under license with API
No reproduction or networking permitted without license from IHS

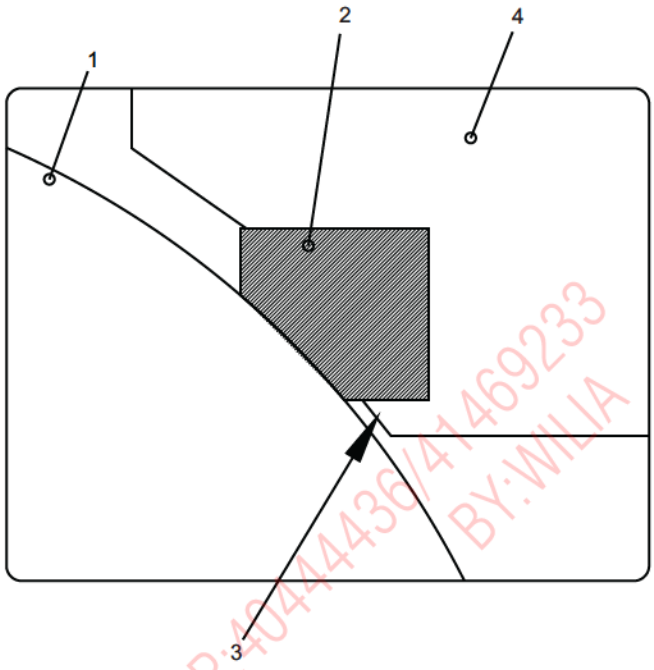

Key
1 ball
2 seat
3 secondary metal sealing
4 adapter or body

a) Fire-resistant Seat Arrangement—Floating Ball Valve

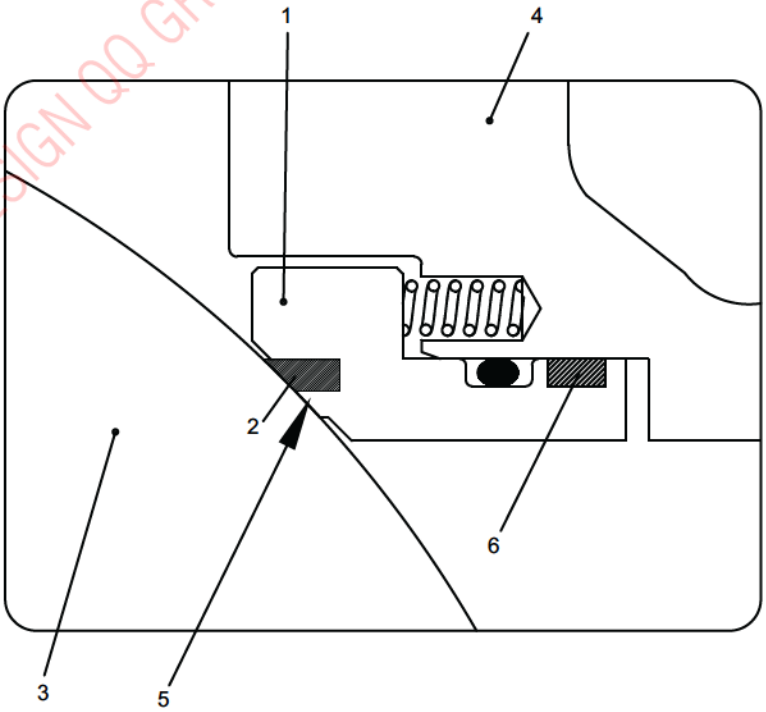

Key
1 seat holder
2 seat
3 ball
4 adapter or body
5 secondary metal seat for fire safety
6 graphite back-up ring

b) Fire-resistant Seat Arrangement—Trunnion Ball Valve

Figure 2—Typical Fire-resistant Seats

VALVE DESIGN QQ GROUP:404444436/41469233 BY:WILIA

Copyright American Petroleum Institute
Provided by IHS under license with API
No reproduction or networking permitted without license from IHS

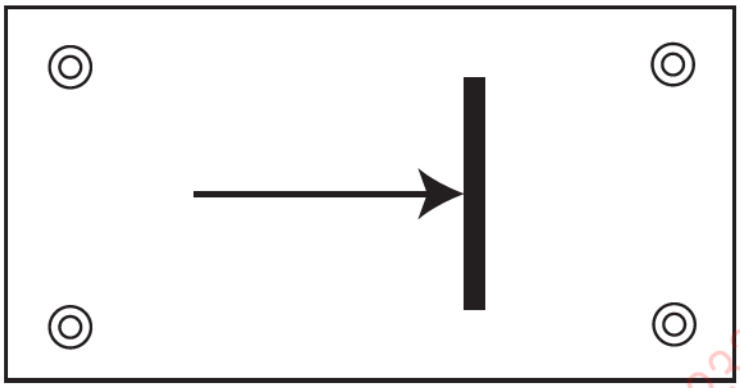

Figure 3—Typical Unidirectional Valve Identification Plate Symbol

9.8 Valves shall be packaged to prevent damage during shipment.

9.9 When export packaging is specified in purchase order, valves shall be shipped in wooden boxes or crates and packed to prevent individual valves from moving within the crate or box.

10 Spare Parts

When specified on the purchase order, manufacturer shall submit a complete list of recommended spare parts. This list shall include cross-sectional assembly drawings for identification of recommended spare parts and part numbers.

VALVE DESIGN QQ GROUP:404414436/414469233 BY:WILLY

Copyright American Petroleum Institute
Provided by IHS under license with API
No reproduction or networking permitted without license from IHS

Annex A
(informative)

Information to Be Specified by the Purchaser

NOTE Numbers in brackets are references to sections or subsections of this standard.

1) Supplemental requirements of this standard shall be specifically stated in the purchase order.

2) If no supplemental requirements are to be taken, the purchase order just needs to refer to API 608 and to specify the items listed below:

a) Nominal valve size [1.1]: _____

b) Nominal pressure class [1.2]: _____

c) End connection type [1.2]: _____

d) Bore size category [1.3]: _____

e) Shell material [6.1]: _____

f) Trim material [6.2]: _____

g) Seat and seal materials [4.3 and 6.4]: _____

h) Operator type [5.8]: _____

i) ASME B16.10 long or short pattern [DN 150 (NPS 6)] and larger Class 150 and 300: _____

OPTIONAL ITEMS THAT CAN BE SPECIFIED BY PURCHASER

a) Lockable device [5.8.11]: _____

b) Inspection by purchaser [7.1.2]: _____

c) Supplementary examinations [7.1.2]: _____

d) Compliance with NACE MR 0103 [6.7]: _____

e) Bolting material [6.3]: _____

f) Special paint or coating: _____

g) Export packaging [9.9]: _____

h) Auxiliary connections [5.3.10]: _____

i) Recommended spare parts [10]: _____

j) Prevention of body cavity overpressure [5.3.11]: _____

k) API 607 fire-tested design [7.4]: _____

VALVE DESIGN QQ GROUP:404444436/41469233
BY:WILIA

Copyright American Petroleum Institute
Provided by IHS under license with API
No reproduction or networking permitted without license from IHS

Annex B
(informative)

Figures

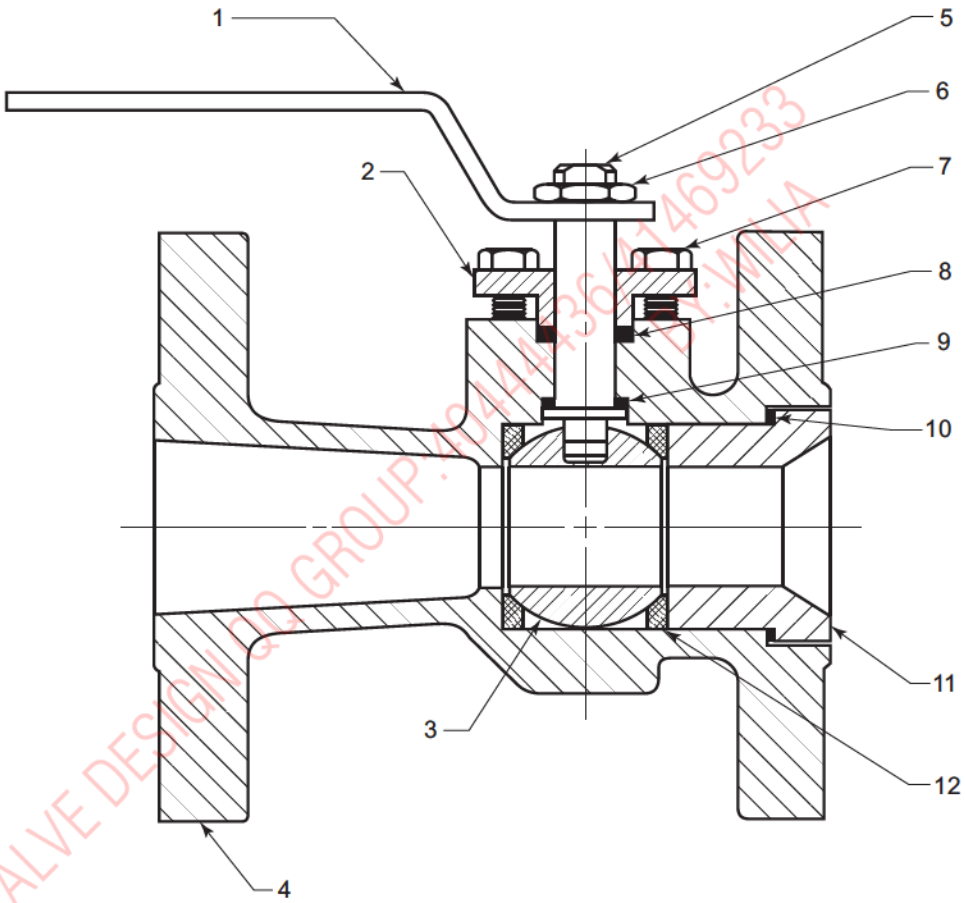

Key
1 handle (lever type)
2 gland flange
3 ball
4 body
5 stem
6 stem nut
7 gland bolting
8 stem seal
9 thrust washer
10 body seal
11 body insert
12 seat

Figure B.1—Typical Floating Ball Valve Components (One-piece Body/Unibody Illustrated)—Nomenclature

Copyright American Petroleum Institute
Provided by IHS under license with API
No reproduction or networking permitted without license from IHS

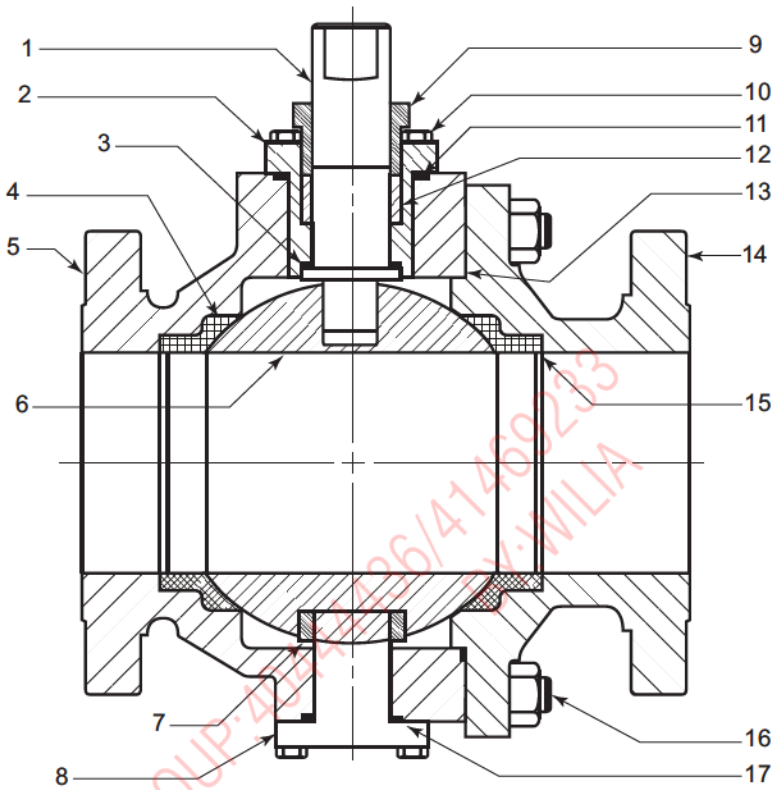

a) Example 1

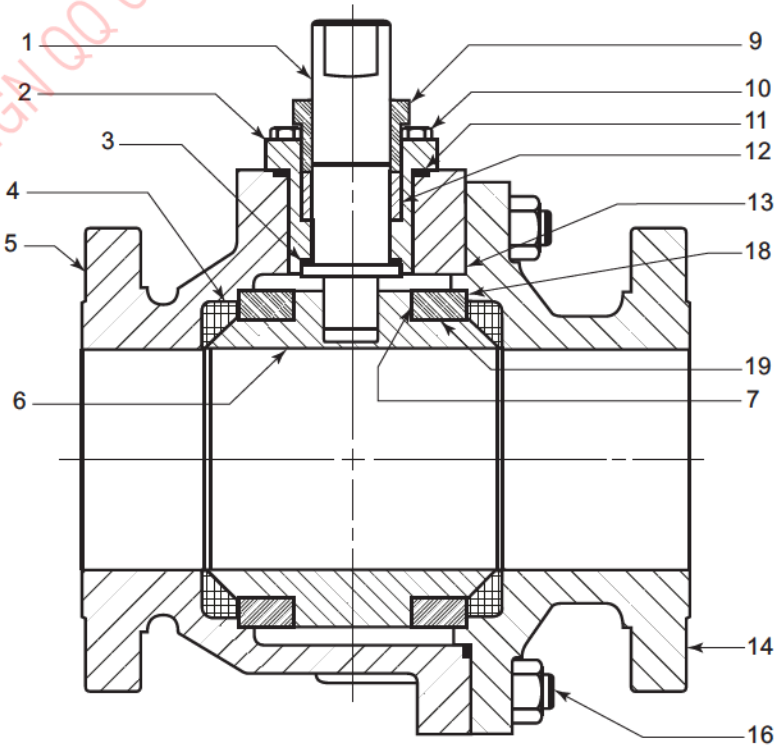

b) Example 2

Key

1 stem
2 cover
3 thrust washer
4 seat
5 body
6 ball
7 trunnion bearing
8 trunnion
9 gland
10 cover bolting
11 cover seal
12 stem seal
13 body seal
14 body cap
15 seat spring
16 body bolting
17 trunnion seal
18 trunnion plate
19 bearing spacer

Figure B.2—Typical Trunnion-mounted Ball Valve Components (Split-body Valve Illustrated)—Nomenclature

VALVE DESIGN QQ GROUP:40444436/41469233 BY:WILIA

Copyright American Petroleum Institute
Provided by IHS under license with API
No reproduction or networking permitted without license from IHS

VALVE DESIGN QQ GROUP:40444436/41469233
BY:WILIA

Copyright American Petroleum Institute
Provided by IHS under license with API
No reproduction or networking permitted without license from IHS

VALVE DESIGN QQ GROUP:40444436/41469233
BY:WILIA

--`,,```,,,,````-`-`,,`,,`,`,,`---

Copyright American Petroleum Institute
Provided by IHS under license with API
No reproduction or networking permitted without license from IHS

VALVE DESIGN QQ GROUP:40444436/41469233
BY:WILIA



AMERICAN PETROLEUM INSTITUTE

1220 L Street, NW
Washington, DC 20005-4070
USA

202-682-8000

Additional copies are available online at www.api.org/pubs

Phone Orders:	1-800-854-7179	(Toll-free in the U.S. and Canada)
	303-397-7956	(Local and International)
Fax Orders:	303-397-2740	

Information about API publications, programs and services is available on the web at www.api.org.

Product No. C60805

Copyright American Petroleum Institute
Provided by IHS under license with API
No reproduction or networking permitted without license from IHS